Vestil Manufacturing Corp.
2999 North Wayne Street, P.O. Box 507, Angola, IN 46703
Telephone: (260) 665-7586 Toll Free (800) 348-0868
Fax: (260) 665-1339
Web: www.vestilmfa.com e-mail: info@vestil.com

MTC-PNU-55 Pneumatic Trash Compactor
Instruction Manual

Receiving Instructions

After delivery, remove the packaging from the product. Inspect the product closely to determine whether it sustained damage during transport. If damage is discovered, record a complete description of it on the bill of lading. If the product is undamaged, discard the packaging.

NOTE: The end-user is solely responsible for confirming that product design, use, and maintenance comply with laws, regulations, codes, and mandatory standards applied where the product is used.

Technical Service & Replacement Parts

For answers to questions not addressed in these instructions and to order replacement parts, labels, and accessories, call our Technical Service and Parts Department at (260) 665-7586. The department can also be contacted online at https://www.vestil.com/page-parts-request.php.

Electronic copies of Instruction Manuals

Additional copies of this instruction manual may be downloaded from https://www.vestil.com/page-manuals.php.

Table of Contents **Page**

Specifications…… 2
Signal Words…… 2
Safety Instructions…… 2 - 3
Pneumatic Circuit Diagram…… 3
Exploded View and Bill of Materials…… 4
Operating the Compactor…… 5
Record of Satisfactory Condition…… 5
Inspections & Maintenance…… 5 - 6
Labeling Diagram…… 6
Limited Warranty…… 7

 Copyright 2021 Vestil Manufacturing Co.

SPECIFICATIONS (22-007-021)

Specifications for MTC-series compactors are provided on Vestil's website. To access the appropriate specifications document, navigate to this webpage: https://www.vestil.com/product.php?FID=1500. Click the "Specifications" tab. Scroll the page to the entry for the model you purchased, and click the button in the PDF column that looks like a pencil inside a blue box. A PDF file will open. This file is the specifications document. Print a copy of the document and keep it with your copy of this manual. The following is an exemplar specifications document for model MTC-PNU-55.

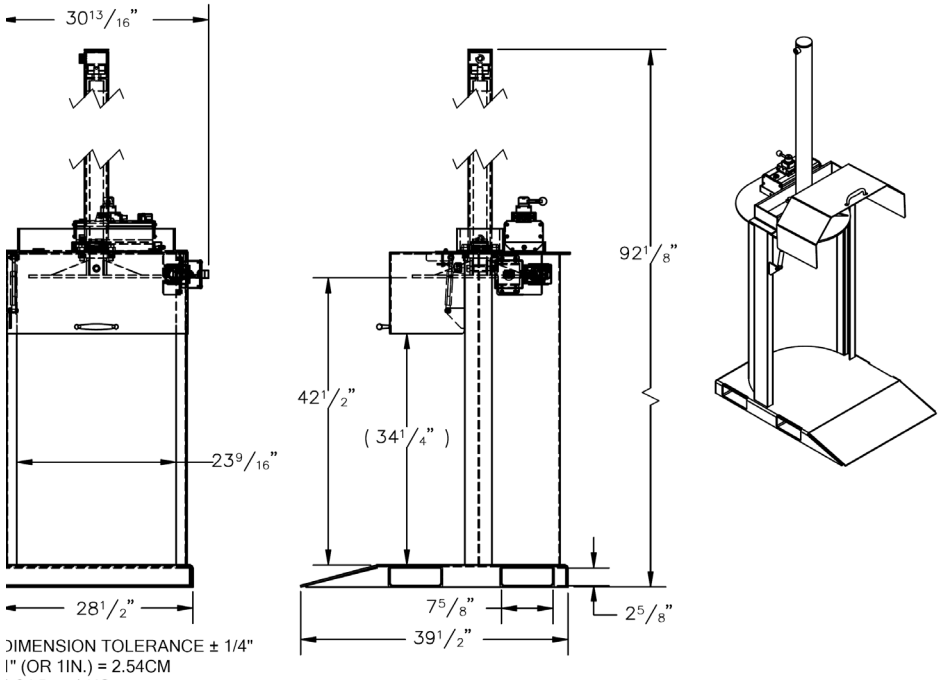

DIMENSION TOLERANCE ± 1/4"
1" (OR 1IN.) = 2.54CM
2.2 LB. = 1 KG

MODEL MTC-PNU-55
APPROXIMATE WEIGHT: 502 LB.
OVERALL WIDTH: 30 13/16"
USABLE WIDTH: 23 9/16"
OVERALL LENGTH: 39 1/2"
OVERALL HEIGHT: 92 1/8"
FORK POCKET OPENING: 2 5/8" X 7 5/8"
USE WITH STEEL 55 GAL DRUMS
CYLINDER FORCE: 21,210 PSI
COMPACTION FORCE: 68 PSI
OPERATIONAL AIR FLOW: 15 CFM
OPERATIONAL AIR PRESSURE: 90 PSI
MANUAL DIRECTION CONTROL VALVE
DURABLE LIQUID PAINT BLUE FINISH

1" (OR 1IN.) = 2.54CM
2.2 LB. = 1 KG

SIGNAL WORDS

This manual uses SIGNAL WORDS to direct the reader's attention to important safety-related messages. These messages describe uses of the product that could result in personal injury or property damage. Each signal word corresponds to a specific hazard level.

DANGER Identifies a hazardous situation which, if not avoided, WILL result in DEATH or SERIOUS INJURY. Use of this signal word is limited to the most extreme situations.

WARNING Identifies a hazardous situation which, if not avoided, COULD result in DEATH or SERIOUS INJURY.

CAUTION Indicates a hazardous situation which, if not avoided, COULD result in MINOR or MODERATE injury.

NOTICE Identifies practices likely to result in product/property damage, such as operation that might damage the product.

SAFETY INSTRUCTIONS

Vestil strives to identify all hazards associated with the use of our products. However, material handling is dangerous and no manual can address every risk. The most effective way to avoid injury is for the end-user to exercise sound judgment whenever using this product.

WARNING

Improper or careless operation might result in serious personal injuries or death.

- Read and understand the entire manual before installing, assembling, using, or servicing the product.
- Moving parts create pinch point and crushing hazards. Avoid contact with the cylinder and the platen whenever the cylinder is extending or retracting. Keep clear of all moving parts during operation.
- Do not operate the machine if the pneumatic roller arm valve does not function properly. The cylinder/ram should not extend or retract unless the guard is down. Do not disable the pneumatic roller arm valve.

(Continues on page 3)

 Copyright 2021 Vestil Manufacturing Co.

⚠ WARNING

- Do not stand in front of the barrel while operating the compactor. Only operate the compactor from behind the barrel cradle.
- Do not use the compactor if it is damaged or makes unusual noises during operation.
- Do not compact materials inside a weakened or damaged drum. For example, do not compact materials inside a drum with a rusty bottom or side wall.
- Do not change the pressure relief valve setting! In particular, do not *increase* the setting.
- Do not inspect or maintain the compactor until it is disconnected from the air supply.
- This device utilizes pressurized air. Never apply pressurized air to the skin. Do not direct pressurized air at yourself or another person.
- Do not start the flow of pressurized air until the air supply hose is securely attached to the quick attach coupler.
- Always wear proper personal protective equipment (PPE) when operating this device.
- Always wear proper protective clothing. Normal work clothing does not provide sufficient protection against pressurized air.
- Do not modify the product in any way without first obtaining approval from the manufacturer. Unapproved modifications automatically void the *LIMITED WARRANTY* (p. 7) and might make the compactor unsafe to use.
- DO NOT use this device unless every label and tag is in place, undamaged, and easily readable from a reasonable distance. See *LABELING DIAGRAM* on. p. 6.

PNEUMATIC CIRCUIT DIAGRAM (22-150-001)

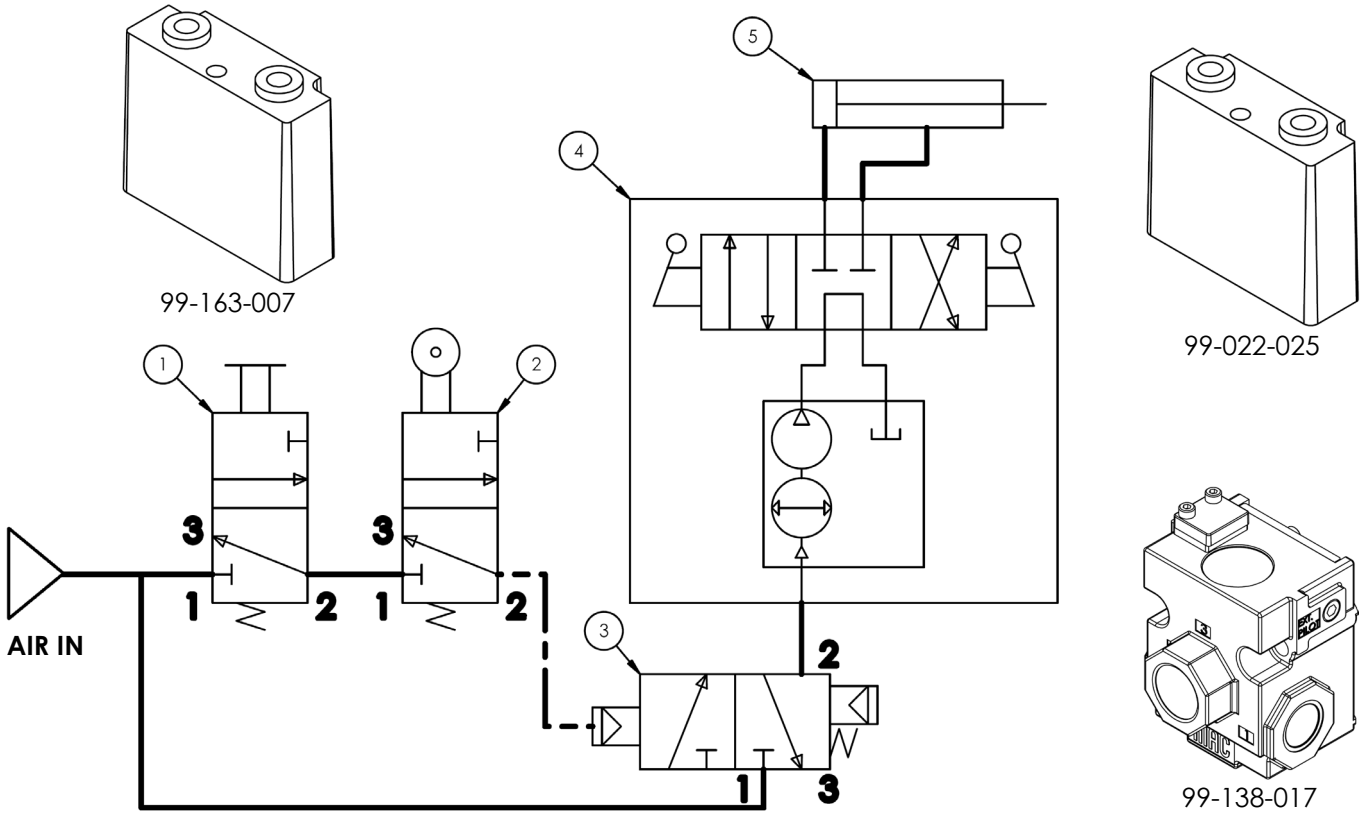

Item	Part no.	Description	Qty.	Item	Part no.	Description	Qty.
1	99-022-025	ACTUATOR,PNEUMATIC, N.C. SELECTOR SWITCH	1	4	99-162-004	PUMP, AIR/HYDRAULIC, 3 POS	1
2	99-163-007	VALVE, PNUEMATIC,N.C.ROLLER ARM	1	5	99-021-069	CYLINDER, HYDRAULIC, Ø2" x 36", PISTON STYLE, FLANGE MOUNT	1
3	99-138-017	VALVE, PNEUMATIC, AIR PILOT OPERATED	1				

Copyright 2021 Vestil Manufacturing Co.

EXPLODED VIEW AND BILL OF MATERIALS (22-006-021)

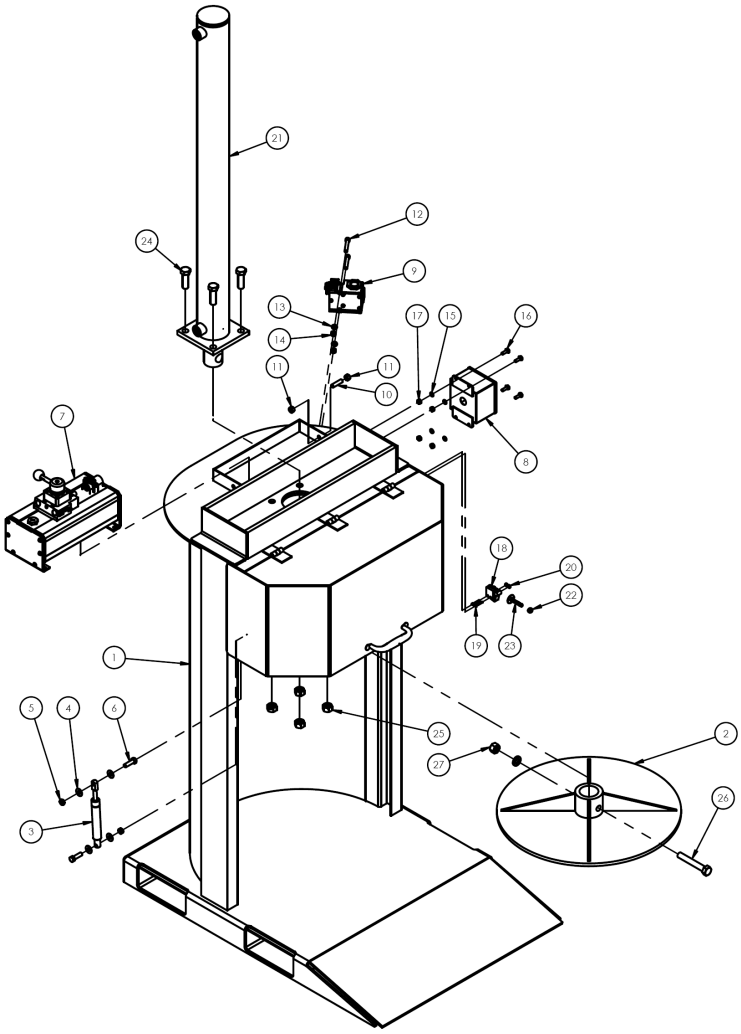

Item	Part no.	Description	Qty.	Item	Part no.	Description	Qty.
1	22-514-056	SUB-ASSEMBLY, FRAME	1	**15**	33618	MEDIUM SPLIT LOCK WASHER, Ø1/4"	4
2	22-514-059	WELDMENT, FRAME, COMPACT PLATE	1	**16**	11003	HEX BOLT, GRADE A, ZINC PLATED, 1/4-20 X 3/4"	4
3	99-145-015	SPEC HARDWARE, SHOCK, TENSION	1	**17**	36102	HEX NUT, GRADE A, ZINC PLATED, 1/4-20	4
4	33006	FLAT WASHER,ZINC PLATED,USS, Ø5/16"	4	**18**	99-163-007	VALVE, PNUEMATIC ROLLER ARM	1
5	37026	JAM NYLOCK INSERT LOCK NUT, Ø 3/8 - 16 UNC, Z PLATED	2	**19**	27327	SLOTTED ROUND HEAD MACHINE SCREW - #6 - 32 x 1	2
6	11107	HEX BOLT, GRADE A, ZINC FINISH, 3/8"-16 x 1-1/4"	2	**20**	36020	MACHINE SCREW NUT, #6-32	2
7	99-162-004	PUMP, AIR/HYDRAULIC, 3 POS	1	**21**	99-021-069	CYLINDER, HYDRAULIC, Ø2" x 36", PISTON STYLE, FLANGE MOUNT	1
8	99-529-150-002	SUB-ASSEMBLY, CONTROL BOX, 4" X 4" X 3"	1	**22**	37018	NYLON LOCK NUT,GRADE 2, ZINC FINISH,1/4"-20	1
***9**	99-138-017	VALVE, PNEUMATIC, AIR PILOT OPERATED VALVE	1	**23**	22805	ELEVATOR BOLT, LIMIT SWITCH	1
10	25545	SSS CP UTILITY GRADE,AUTO FOOT PUMP,3/8-16 x 1 1/2 LG.	1	**24**	11311	HEX BOLT, GRADE 2, ZINC FINISH, 5/8"-11 x 2"	4
11	36106	HEX NUT, GRADE A, ZINC PLATED, 3/8-16	2	**25**	36314	5/8"-11 UNC GR. 5 HEX NUT Z PLATED	4
12	23261	SHCS, 5/16-18 x 2" LONG	2	**26**	11319	BOLT, Ø5/8-11 UNC x 4" LG	1
13	33620	LOCK WASHER, MEDIUM SPLIT, Ø5/16"	2	**27**	36114	HEX NUT Z-PLATED, Ø5/8 - 11 UNC	1
14	36104	HEX NUT, GRADE A, ZINC PLATED, 5/16-18	2	**28**	33630	5/8" ZINC FINISH MEDIUM SPLIT LOCK WASHER	1

Copyright 2021 Vestil Manufacturing Co.

OPERATING THE COMPACTOR

Apply the following steps to operate the compactor:

1) Grasp the handle and raise the guard
2) Place a 55gal. barrel on the base.
3) Center the barrel beneath the platen.
4) Lower the guard. The compactor will not operate unless the guard is down.
5) Connect factory air to the quick-attach adaptor. Air pressure must be at least 80PSI (15CFM).
6) Turn the power toggle switch ON.
7) Stand behind the barrel/drum cradle. Turn the compactor direction control lever counterclockwise to the DOWN position. The cylinder/ram extends. The platen compresses the contents of the barrel. When the cylinder achieves maximum extension, barrel contents are fully compacted.
8) Retract the cylinder by turning the direction control lever clockwise to the UP position.
9) Fully retract the cylinder/ram. Then, turn the power toggle switch OFF.
10) Raise the guard. Remove the barrel.
11) Lower the guard
12) Disconnect factory air.

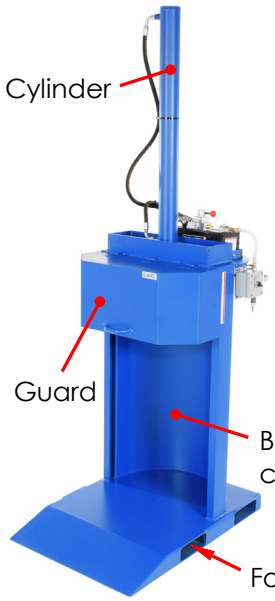

Air pilot operated valve mounted on pump

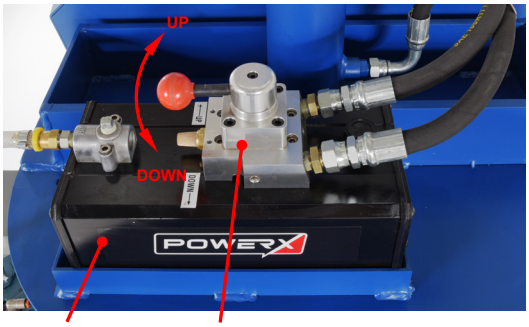

Control box with power toggle switch (shown OFF)

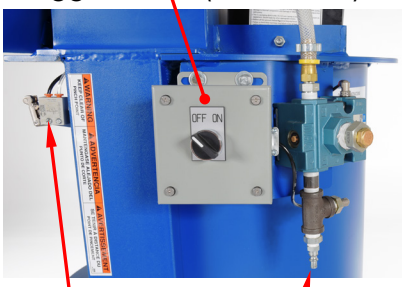

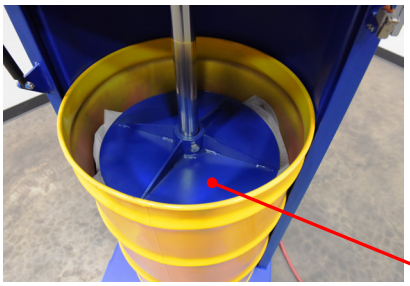

Platen compacts drum contents

RECORD OF SATISFACTORY CONDITION

Before using the compactor for the first time, make a record of its appearance and operation. Thoroughly photograph the unit. Include close-range photographs of each label applied to the unit, the pump (7), the control box (8), the air pilot operated valve (9), the cylinder (21), and the roller arm valve (18). Cycle the compactor by following the *OPERATING THE COMPACTOR* instructions. Watch the cylinder and listen to the pump as the ram cycles. Record your observations about the sound of the motor and the movement of the ram. Collect all photographs and writings into a single file. This file is a record of the unit in satisfactory condition.

INSPECTIONS & MAINTENANCE

Disconnect the compactor from factory air and inspect it as instructed. Compare the results each inspection with the *RECORD OF SATISFACTORY CONDITION* to determine whether the unit is in satisfactory condition. DO NOT use the compactor unless it is in satisfactory condition. Only use manufacturer-approved replacement parts to restore the unit to satisfactory condition. **DON'T GUESS! If you have any questions about the condition of your unit, contact the** *TECHNICAL SERVICE* **department.** The phone number is provided on the cover page of this manual. *Never make temporary repairs of damaged or missing parts*. Purely cosmetic changes, such as chipped paint, are not changes from satisfactory condition. However, touchup paint should be applied to all areas where the finish is damaged as soon as the damage occurs because exposed metal rusts. Left unaddressed, rusting could compromise the soundness of the metal and create a safety hazard.

At least once per month or once per week whenever the unit is used more than 5 times per week:

1. Examine the pneumatic system. Look for damaged hoses or fittings. In particular, look for kinks, punctures, tears, or other damage causing leaks.

 Copyright 2021 Vestil Manufacturing Co.

2. Inspect the cylinder/ram. Operate the compactor through a full cycle by applying the *OPERATING THE COMPACTOR* procedure. Listen for unusual noises and watch for cylinder binding during the cycle. Check the cylinder to make sure that it is not bent, cracked, or otherwise damaged.
3. Make sure that labels are in place, undamaged, and easily readable. See *LABELING DIAGRAM* on p. 6.
4. Inspect the platen. Look for cracks, damaged welds, warps, etc. The platen must be securely fastened to the end of the cylinder. Examine all fasteners (pins, bolts, washers, nuts) for damage, corrosion, and rust.
5. Thoroughly examine the frame (base, fork pockets, and drum cradle) for cracks, rust, and corrosion. Clean the surfaces as needed. Keep the unit clean and dry.
6. Inspect the guard and the roller arm valve. Lift the guard. Make sure that the tension shock holds the guard in the raised position. Connect the unit to the air supply. Turn power on and turn the control lever to the ON position. The cylinder should not move while the guard is raised. Lower the guard. Confirm that the cylinder operates while the guard is lowered. Turn power off and disconnect the air supply.
7. Repair areas where the finish has been damaged. Use steel wool or a steel bristle brush and a slightly dampened cloth to remove rust. Apply touchup paint to the affected areas once they are dry.

LABELING DIAGRAM

Label content and location are subject to change so your product might not be labeled exactly as shown. Compare this diagram to the *RECORD OF SATISFACTORY CONDITION*. Replace all labels that are damaged, missing, or not easily readable (e.g. faded). Order replacement labels by contacting the *TECHNICAL SERVICE AND REPLACEMENT PARTS DEPARTMENT* online at http://www.vestilmfg.com/parts_info.htm. Alternatively, you may request replacement parts and/or service by calling (260) 665-7586 and asking the operator to connect you to the Parts Department.

A: Label 1116

B: Label 220

C: Label 1114

D: Label 1115

E: Label 1117

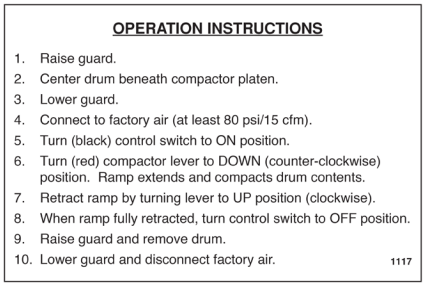

OPERATION INSTRUCTIONS

1. Raise guard.
2. Center drum beneath compactor platen.
3. Lower guard.
4. Connect to factory air (at least 80 psi/15 cfm).
5. Turn (black) control switch to ON position.
6. Turn (red) compactor lever to DOWN (counter-clockwise) position. Ramp extends and compacts drum contents.
7. Retract ramp by turning lever to UP position (clockwise).
8. When ramp fully retracted, turn control switch to OFF position.
9. Raise guard and remove drum.
10. Lower guard and disconnect factory air.

1117

F: Label 208

G: Label 1112

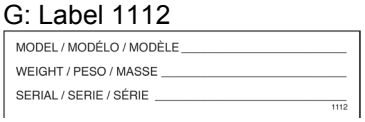

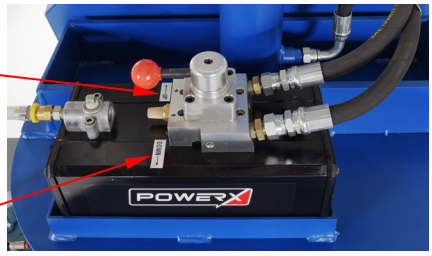

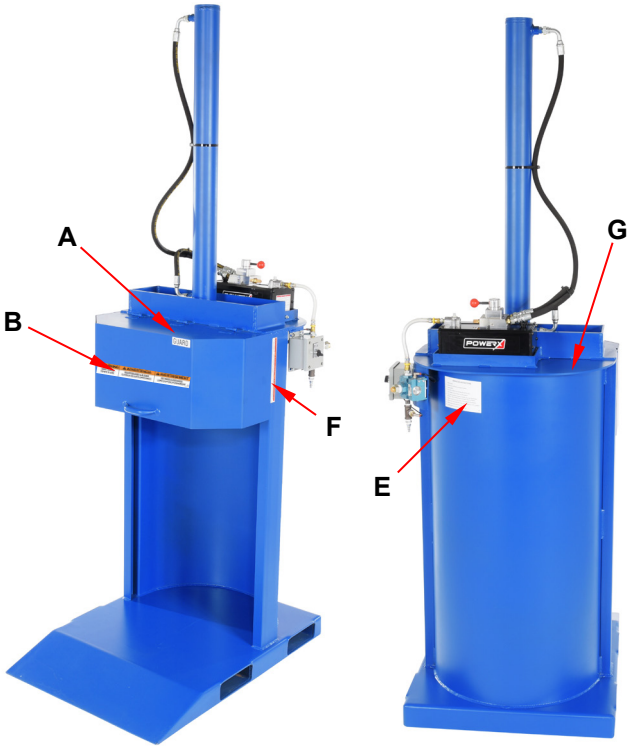

Copyright 2021 Vestil Manufacturing Co.

LIMITED WARRANTY

Vestil Manufacturing Corporation ("Vestil") warrants this product to be free of defects in material and workmanship during the warranty period. Our warranty obligation is to provide a replacement for a defective, original part covered by the warranty after we receive a proper request from the Warrantee (you) for warranty service.

Who may request service?
Only a warrantee may request service. You are a warrantee if you purchased the product from Vestil or from an authorized distributor AND Vestil has been fully paid.

Definition of "original part"?
An original part is a part used to make the product as shipped to the Warrantee.

What is a "proper request"?
A request for warranty service is proper if Vestil receives: 1) a photocopy of the Customer Invoice that displays the shipping date; AND 2) a written request for warranty service including your name and phone number. Send requests by one of the following methods:

US Mail	Fax	Email
Vestil Manufacturing Corporation	(260) 665-1339	info@vestil.com
2999 North Wayne Street, PO Box 507	Phone	Enter "Warranty service request"
Angola, IN 46703	(260) 665-7586	in the subject field.

In the written request, list the parts believed to be defective and include the address where replacements should be delivered. After Vestil receives your request for warranty service, an authorized representative will contact you to determine whether your claim is covered by the warranty. Before providing warranty service, Vestil will require you to send the entire product, or just the defective part (or parts), to its facility in Angola, IN.

What is covered under the warranty?
The warranty covers defects in the following original, dynamic parts: motors, hydraulic pumps, motor controllers, and cylinders. It also covers defects in original parts that wear under normal usage conditions ("wearing parts"), such as bearings, hoses, wheels, seals, brushes, and batteries.

How long is the warranty period?
The warranty period for original dynamic components is 1 year. For wearing parts, the warranty period is 90 days. Both warranty periods begin on the date Vestil ships the product to the Warrantee. If the product was purchased from an authorized distributor, the periods begin when the distributor ships the product. Vestil may, at its sole discretion, extend a warranty period for products shipped from authorized distributors by up to 30 days to account for shipping time.

If a defective part is covered by the warranty, what will Vestil do to correct the problem?
Vestil will provide an appropriate replacement for any *covered* part. An authorized representative of Vestil will contact you to discuss your claim.

What is not covered by the warranty?
The Warrantee (you) is responsible for paying labor costs and freight costs to return the product to Vestil for warranty service.

Events that automatically void this Limited Warranty.

- Misuse;
- Negligent assembly, installation, operation or repair;
- Installation/use in corrosive environments;
- Inadequate or improper maintenance;
- Damage sustained during shipping;
- Collisions or other accidents that damage the product;
- Unauthorized modifications: Do not modify the product IN ANY WAY without first receiving written authorization from Vestil.

Do any other warranties apply to the product?
Vestil Manufacturing Corp. makes no other express warranties. All implied warranties are disclaimed to the extent allowed by law. Any implied warranty not disclaimed is limited in scope to the terms of this Limited Warranty. Vestil makes no warranty or representation that this product complies with any state or local design, performance, or safety code or standard. Noncompliance with any such code or standard is not a defect in material or workmanship.

Copyright 2021 Vestil Manufacturing Co.